Electrical position feedback

Features

Compact electrical position feedback unit for angle seat valves, offering clear LED indication and reliable position feedback in demanding environments.

- Compact design; ideal for angle seat valves with linear motion.
- 360° adjustable and directly mounted on the valve.
- Green/Red LED for clear open/close position indication.
- Splash-proof, double-sealed housing to prevent water ingress.

Technical data

Item	Specification
Travel type	Linear motion
Switches	Mechnical switch 2×SPDT
Power supply	DC12V-48V
Enclosure	IP67, when wired and cable gland tightened
Ambient temp.	-20~60℃
Valve mounting	M26×1.5, M22×1.5, M16×1.5, M14×1, G1/4
Cable entry	M16×1.5
LED indicator	2-way: Green (Open), Red (Closed)

Dimensions

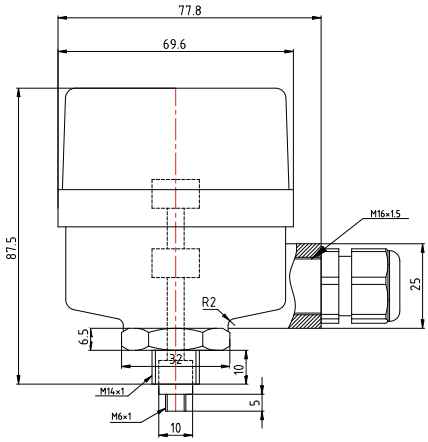

Note:
(1) M26×1.5, M22×1.5, M16×1.5, and G1/4 mounting threads are available on request.
(2) Different actuator strokes require different feedback devices. Currently, Coreline only offers this feedback unit for spring return actuators.

Coreline

The contents of this catalogue are confidential and proprietary to Coreline, we reserve the right to change the specifications without any notice.

CORELINE LTD.

Add: No.4 Wangjiang Road, Muqiao Town, Zhengpugang New District, Hexian, Ma'anshan City, Anhui Province, China

Http: // www.coreline.dk E-mail : mail@coreline.cn